AVERY DENNISON MARKETING SPECIFICATION

THE SUBJECT MATTER DISCLOSED HEREIN EMBODIES PROPRIETARY INFORMATION WHICH IS THE CONFIDENTIAL PROPERTY OF THE AVERY DENNISON CO. NONE OF WHICH SHALL BE COPIED, REPRODUCED, DISCLOSED TO OTHERS, PUBLISHED OR USED IN WHOLE OR IN PART, FOR ANY PURPOSE OTHER THAN THAT FOR WHICH IT IS BEING MADE AVAILABLE WITHOUT THE EXPRESS ADVANCE WRITTEN PERMISSION OF A DULY AUTHORIZED AGENT OF THE COMPANY. THIS DOCUMENT IS THE PROPERTY OF THE AVERY DENNISON CO. AND IS TO BE RETURNED TO THE COMPANY ON DEMAND.

HISTORY

REV.	DATE	DESCRIPTION
A	11.17.15	RELEASED TO PRODUCTION

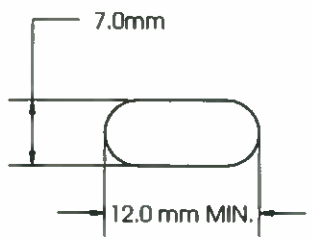

MOUNTING HOLE

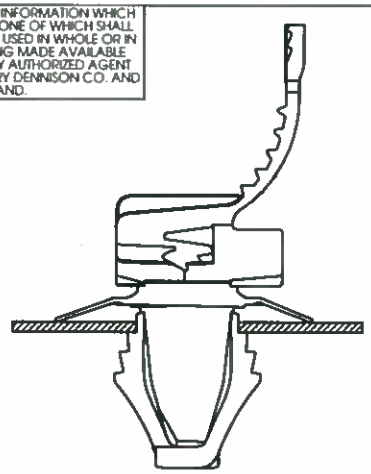

ASSEMBLED VIEW

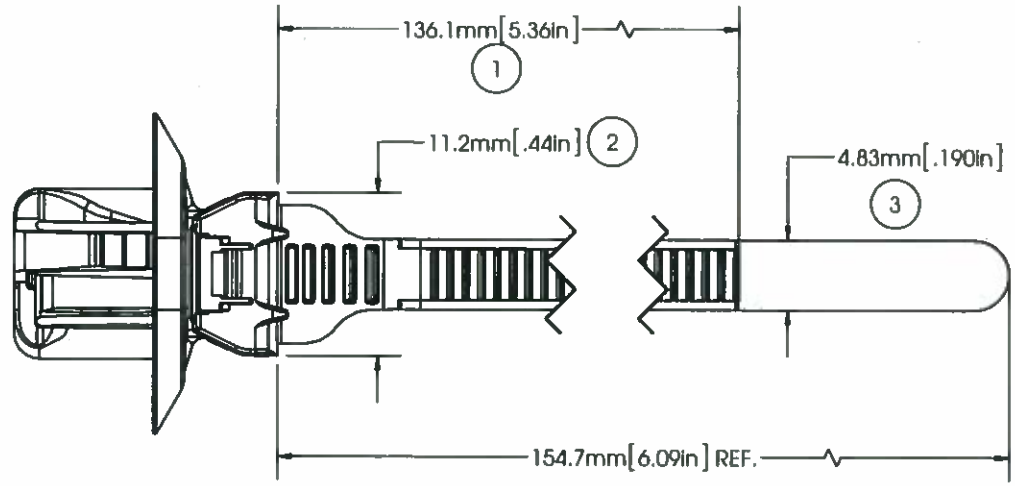

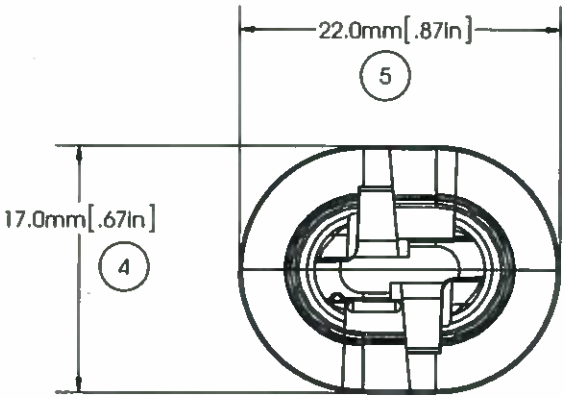

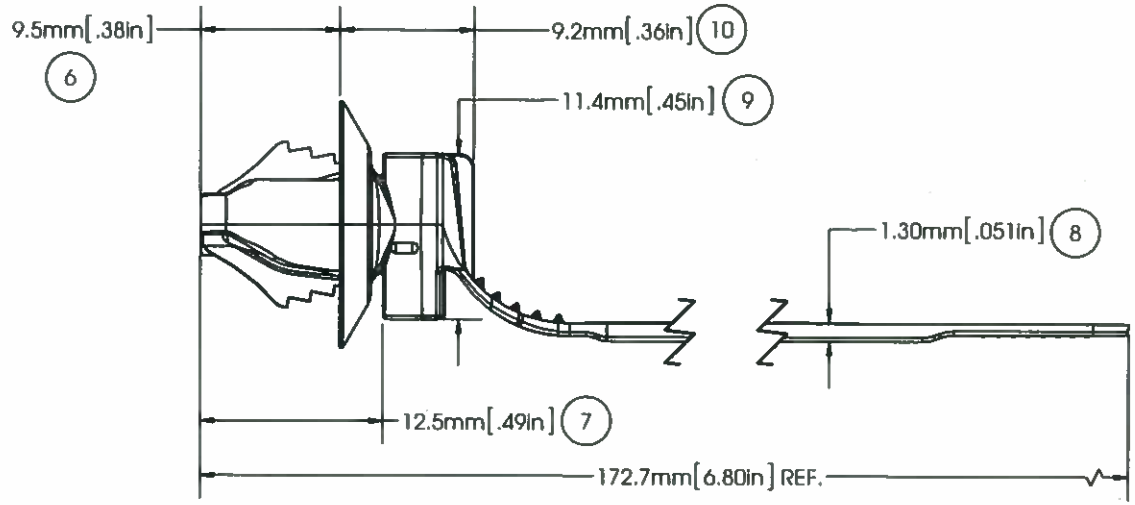

MOUNTING:	7mm X12mm MIN. SLOTTED HOLE
PANEL THICKNESS RANGE:	0.6mm TO 3.6mm THK.
TENSILE STRENGTH:	50 LBF / 222N MIN.
WEIGHT:	1.86 GRAMS
TEMPERATURE RANGE:	-40°F (-40°C) TO 302°F (150°C) CONTINUOUS AND 329°F (165°C) AT MAXIMUM EXPOSURE
BUNDLE DIAMETER:	Ø1.6mm TO Ø38.1mm
TOOL:	12001- HAND INSTALLATION TOOL 12500- PNUEM. INSTALLATION TOOL
TOOL TENSION SETTING:	6 - 8
PACKAGING:	500/BAG, 10 BAGS/MASTER

APPROVALS: ENG. APPR. 11/17/15 Q.A. APPR. 11/17/15

SPECIFIED TOLERANCES ARE:

.XX ± .03 INCHES .X ± .7 mm

.XXX ± .010 INCHES .XX ± .25 mm

ANGULAR: ± 2°

MATERIAL: NYLON 6/6, IMPACT MODIFIED, HEAT STABILIZED

COLOR: BROWN

AVERY DENNISON
FASTENER DIVISION
FITCHBURG, MA 01420 U.S.A.
TEL. 1-800-225-5913
FAX. 978-353-8157

DESCRIPTION: DIRECTIONAL SLOT TIE, HI TEMP

STOCK NO. 20115-HHBN

REV. A

5 4 3 2 1